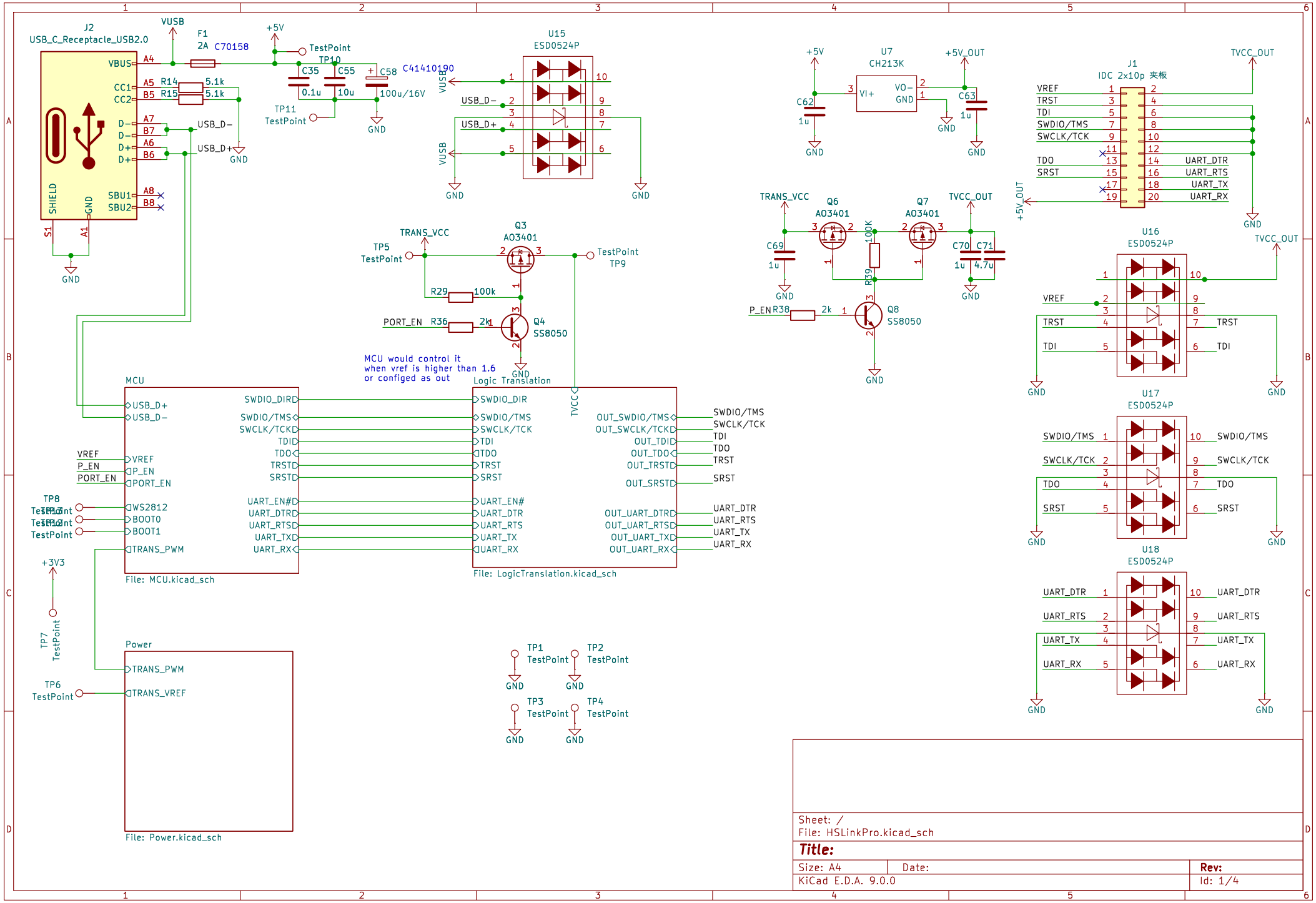

Sheet: /
File: HSLinkPro.kicad_sch

Title:

Size: A4	Date:	Rev:
KiCad E.D.A. 9.0.0		Id: 1/4

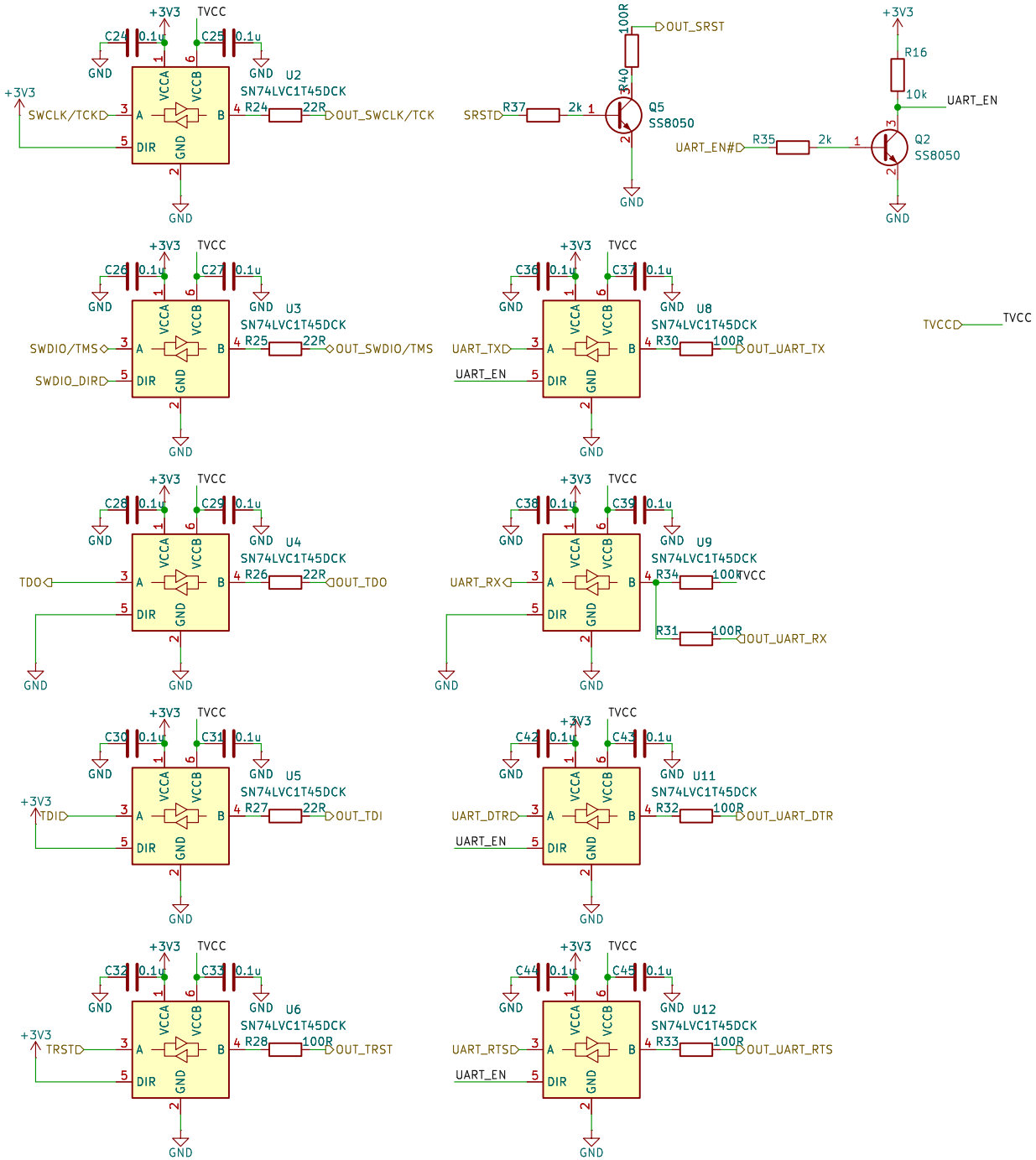

Sheet: /Logic Translation/
File: LogicTranslation.kicad_sch

Title:

Size: A4	Date:	Rev:
KiCad E.D.A. 9.0.0		Id: 3/4

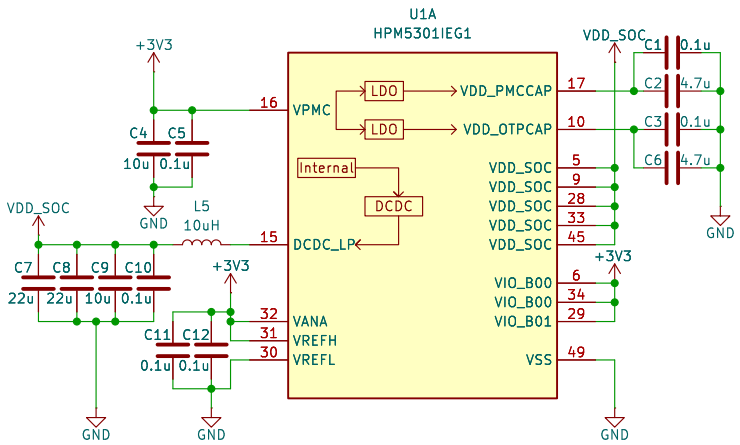

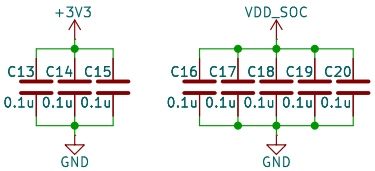

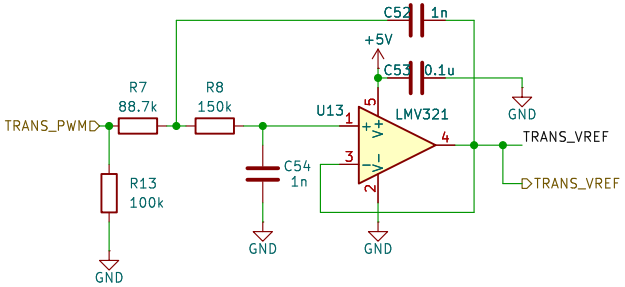

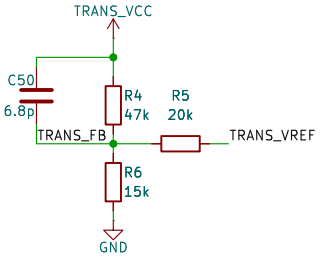

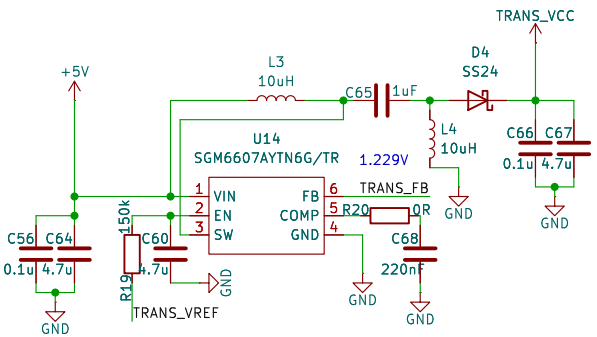

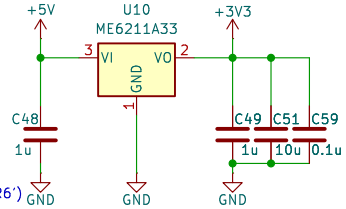

节点电流法
VFB/R6=(TVREF−VFB)/R5+(TVCC−VFB)/R4

```
from sympy import symbols, Eq, solve, collect, expand

VFB, VREF, TVCC, TVREF, R4, R5, R6 = symbols('VFB VREF TVCC TVREF R4 R5 R6')
eq = Eq(VFB / R6, (VREF - VFB) / R5 + (TVCC - VFB) / R4)

sol = solve(eq, VREF)[0]

sol_collected = collect(expand(sol), TVCC)

values = {
    VFB: 1.229,
    R6: 15e3,
    R5: 20e3,
    R4: 47e3
}
numerical_expr = sol_collected.subs(values)

print("TVREF = ", numerical_expr)

tvcc_values = [1.8, 3.3, 5.0]
for vcc in tvcc_values:
    tvref = numerical_expr.subs(TVCC, vcc).evalf()
    print(f"TVREF = {tvref:.4f} V → TVCC = {vcc:.2f} V")
```

```
TVREF =  3.39064539007092 - 0.425531914893617*TVCC
TVREF = 2.6247 V → TVCC = 1.80 V
TVREF = 1.9864 V → TVCC = 3.30 V
TVREF = 1.2630 V → TVCC = 5.00 V
```

Sheet: /Power/
File: Power.kicad_sch

Title:

Size: A4	Date:	Rev:
KiCad E.D.A. 9.0.0		Id: 4/4

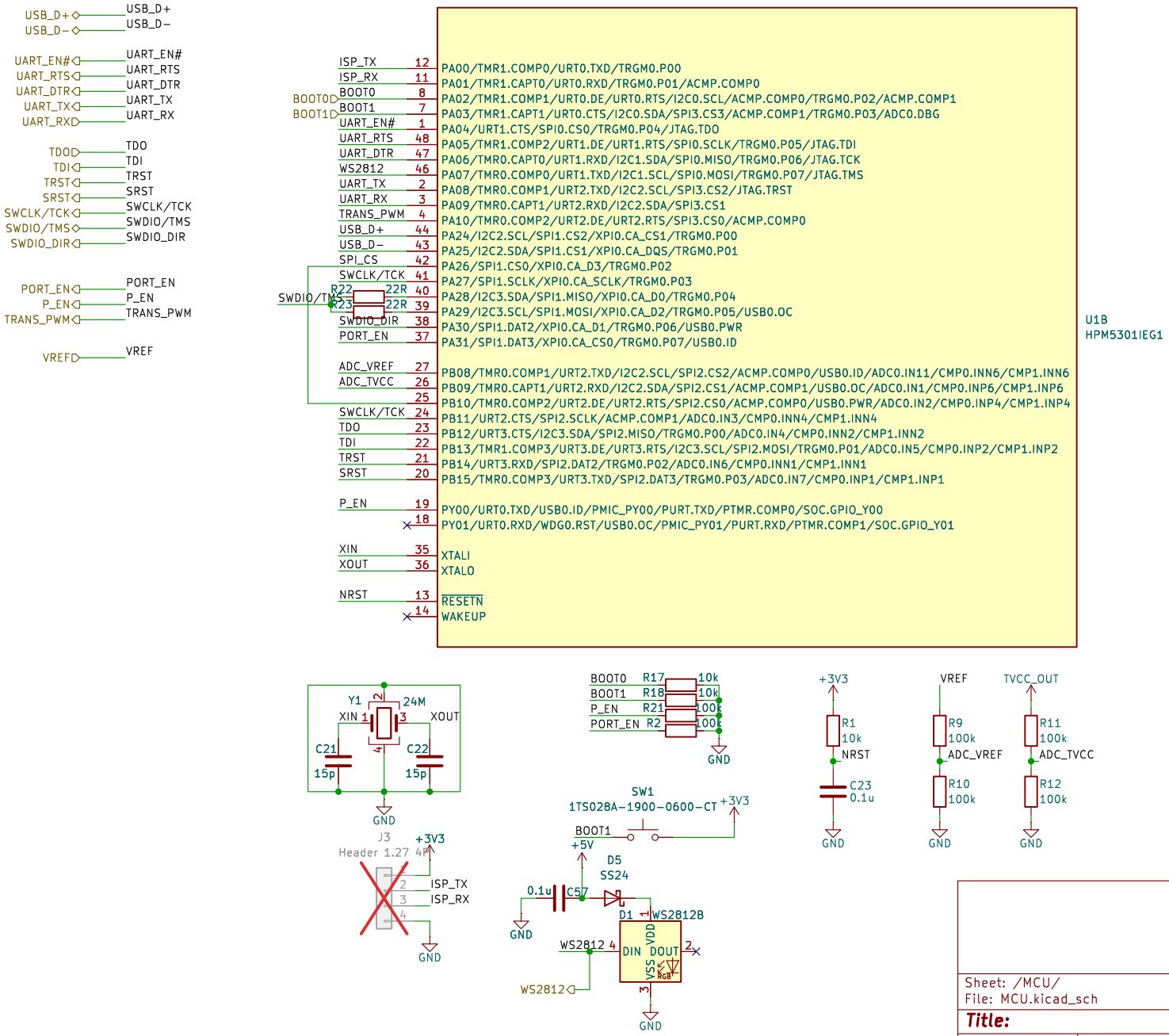

Sheet: /MCU/
File: MCU.kicad_sch

Title:

Size: A4	Date:	Rev:
KiCad E.D.A. 9.0.0		Id: 5/4